LPZP2B5905

ŻÓŁTA OBUDOWA LPZP2A5 Z PRZYCISKIEM GRZYBKOWYM LPCB6844, ODBLOKOWANIE KLUCZEM, 1NO+1NC I CZERWONA LAMPKA 24V

Wymiary

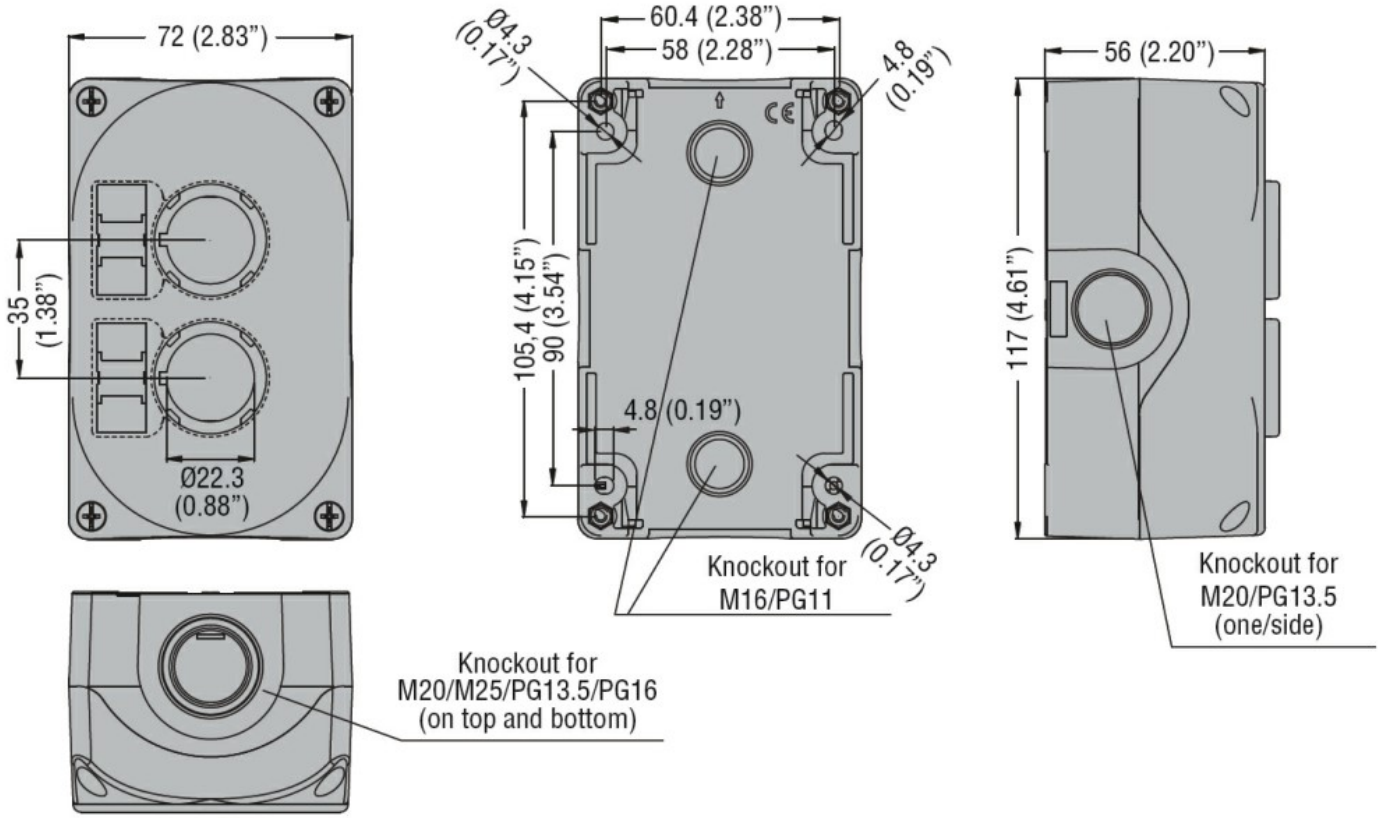

Certyfikaty i zgodność

Certyfikaty

cULus

The characteristics described in this document are subject to updates or modifications at any time. The descriptions, technical and functional information, illustrations and instructions in this brochure are purely illustrative, and are consequently not contractually binding