BF50T4A12060

FOUR-POLE CONTACTOR, IEC OPERATING CURRENT ITH (AC1) = 90A, AC COIL 60HZ, 120VAC

Product designation			Power contactor
Product type designation			BF50
Contact characteristics			
Number of poles		Nr.	4
Rated insulation voltage Ui IEC/EN		V	1000
Rated impulse withstand voltage Uimp		kV	8
Operational frequency			
	min	Hz	25
	max	Hz	400
IEC Conventional free air thermal current Ith		A	90
Operational current Ie			
	AC-1 (≤40°C)	A	90
	AC-1 (≤55°C)	A	75
	AC-1 (≤70°C)	A	65
	AC-3 (≤440V ≤55°C)	A	50
	AC-4 (400V)	A	28
Rated operational current AC-3 (T≤55°C)			
	230V	A	50
	400V	A	50
	415V	A	50
	440V	A	50
	500V	A	44
	690V	A	39
	1000V	A	23
Rated operational power AC-1 (T≤40°C)			
	230V	kW	34
	400V	kW	59
	500V	kW	74
	690V	kW	102
IEC max current Ie in DC1 with L/R ≤ 1ms with 1 poles in series			
	≤24V	A	45
	48V	A	40
	75V	A	40
	110V	A	8
	220V	A	–
IEC max current Ie in DC1 with L/R ≤ 1ms with 2 poles in series			
	≤24V	A	60
	48V	A	60
	75V	A	60
	110V	A	50
	220V	A	7
IEC max current Ie in DC1 with L/R ≤ 1ms with 3 poles in series			
	≤24V	A	60
	48V	A	60
	75V	A	60

	110V	A	55
	220V	A	75
IEC max current Ie in DC1 with L/R ≤ 1ms with 4 poles in series			
	≤24V	A	60
	48V	A	60
	75V	A	60
	110V	A	60
	220V	A	90
IEC max current Ie in DC3-DC5 with L/R ≤ 15ms with 1 poles in series			
	≤24V	A	30
	48V	A	25
	75V	A	22
	110V	A	3
	220V	A	–
IEC max current Ie in DC3-DC5 with L/R ≤ 15ms with 2 poles in series			
	≤24V	A	35
	48V	A	35
	75V	A	30
	110V	A	25
	220V	A	5
IEC max current Ie in DC3-DC5 with L/R ≤ 15ms with 3 poles in series			
	≤24V	A	50
	48V	A	50
	75V	A	45
	110V	A	30
	220V	A	40
IEC max current Ie in DC3-DC5 with L/R ≤ 15ms with 4 poles in series			
	≤24V	A	55
	48V	A	55
	75V	A	55
	110V	A	45
	220V	A	50
Short-time allowable current for 10s (IEC/EN60947-1)		A	400
Protection fuse			
	gG (IEC)	A	100
	aM (IEC)	A	50
Making capacity (RMS value)		A	500
Breaking capacity at voltage			
	440V	A	400
	500V	A	352
	690V	A	312
Resistance per pole (average value)		mΩ	0.8
Power dissipation per pole (average value)			
	Ith	W	6.5
	AC-3	W	2
Tightening torque for terminals			
	min	Nm	4
	max	Nm	5
	min	Ibin	2.95
	max	Ibin	3.69
Tightening torque for coil terminal			
	min	Nm	0.8
	max	Nm	1

	min	Ibin	0.8
	max	Ibin	0.74
Max number of wires simultaneously connectable		Nr.	2
Conductor section			
AWG/Kcmil			
	max		2
Flexible w/o lug conductor section			
	min	mm²	1.5
	max	mm²	35
Flexible c/w lug conductor section			
	min	mm²	1.5
	max	mm²	35
Power terminal protection according to IEC/EN 60529			IP20 front
Mechanical features			
Operating position			
	normal		Vertical plan
	allowable		±30°
Fixing			Screw / DIN rail 35mm
Weight		g	1240
Conductor section			
AWG/kcmil conductor section			
	max		2
Operations			
Mechanical life		cycles	15000000
Electrical life		cycles	1400000
Safety related data			
Performance level B10d according to EN/ISO 13489-1			
	rated load	cycles	1400000
	mechanical load	cycles	15000000
Mirror contats according to IEC/EN 609474-4-1			yes
EMC compatibility			yes
AC coil operating			
Rated AC voltage at 60Hz		V	120
AC operating voltage			
of 60Hz coil powered at 60Hz			
pick-up			
	min	%Us	80
	max	%Us	110
drop-out			
	min	%Us	20
	max	%Us	55
AC average coil consumption at 20°C			
of 60Hz coil powered at 60Hz			
	in-rush	VA	210
	holding	VA	15
Dissipation at holding ≤20°C 50Hz		W	5
Max cycles frequency			
Mechanical operation		cycles/h	3600
Operating times			
Average time for Us control			
in AC			
Closing NO			

			min	ms	12
			max	ms	28
		Opening NO			
			min	ms	8
			max	ms	22
	in DC				
		Closing NO			
			min	ms	40
			max	ms	85
		Opening NO			
			min	ms	20
			max	ms	55
UL technical data					
Full-load current (FLA) for three-phase AC motor					
			at 480V	A	52
			at 600V	A	41
Yielded mechanical performance					
	for single-phase AC motor				
			110/120V	HP	5
			230V	HP	10
	for three-phase AC motor				
			200/208V	HP	15
			220/230V	HP	20
			460/480V	HP	40
			575/600V	HP	40
General USE					
	Contactor				
			AC current	A	90
Short-circuit protection fuse, 600V					
	High fault				
			Short circuit current	kA	100
			Fuse rating	A	150
			Fuse class		J
	Standard fault				
			Short circuit current	kA	5
			Fuse rating	A	150
			Fuse class		RK5
Ambient conditions					
Temperature					
	Operating temperature				
			min	°C	-50
			max	°C	70
	Storage temperature				
			min	°C	-60
			max	°C	80
Max altitude				m	3000
Resistance & Protection					
Pollution degree					3
Dimensions					

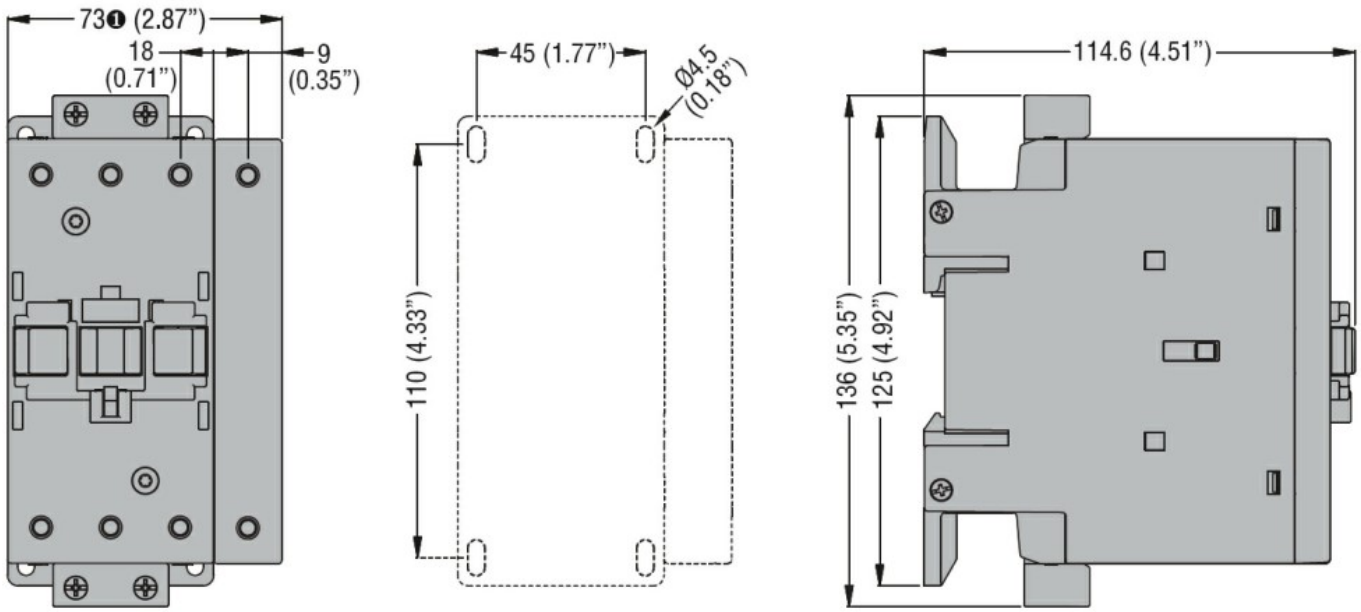

❶ BF80T2 82mm/3.23"

Wiring diagrams

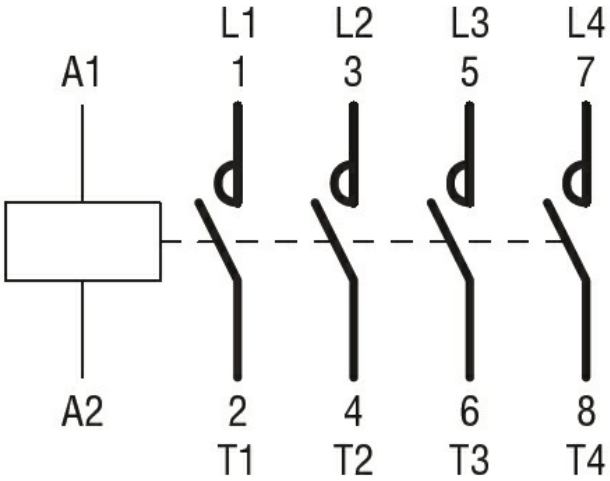

Certifications and compliance

Compliance	
	CSA C22.2 n° 60947-1
	CSA C22.2 n° 60947-4-1
	IEC/EN/BS 60947-1
	IEC/EN/BS 60947-4-1
	UL 60947-1
	UL 60947-4-1
Certificates	
	CCC
	cULus

ETIM classification

ETIM 8.0	EC000066 - Power contactor, AC switching